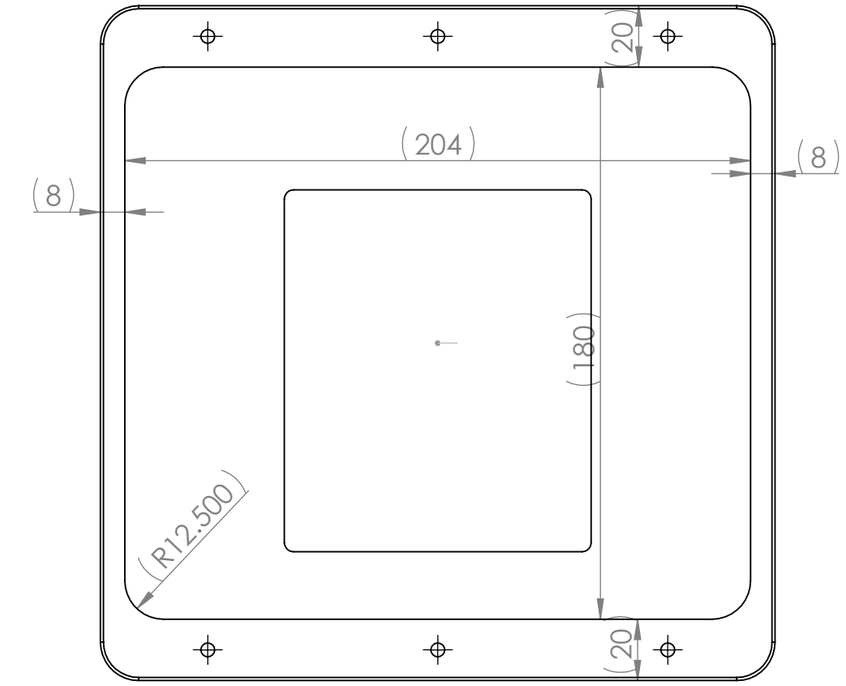

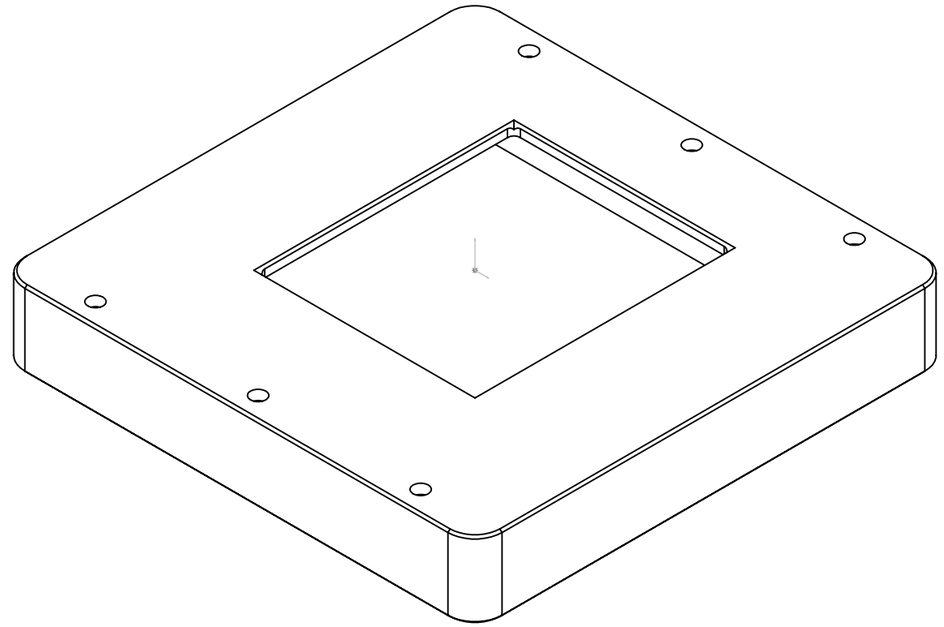

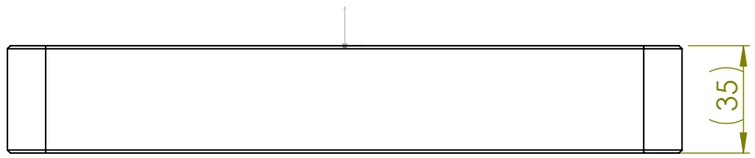

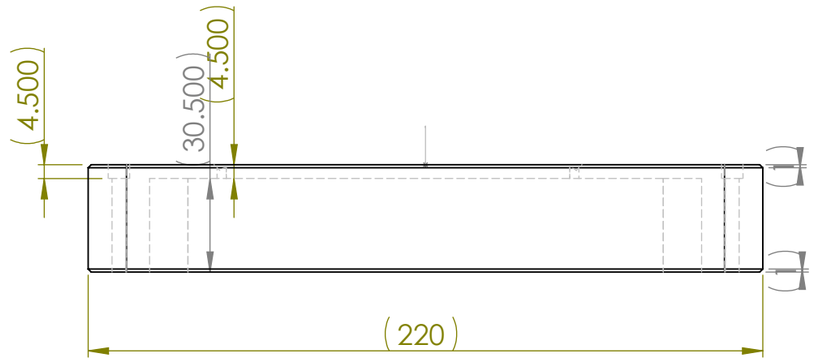

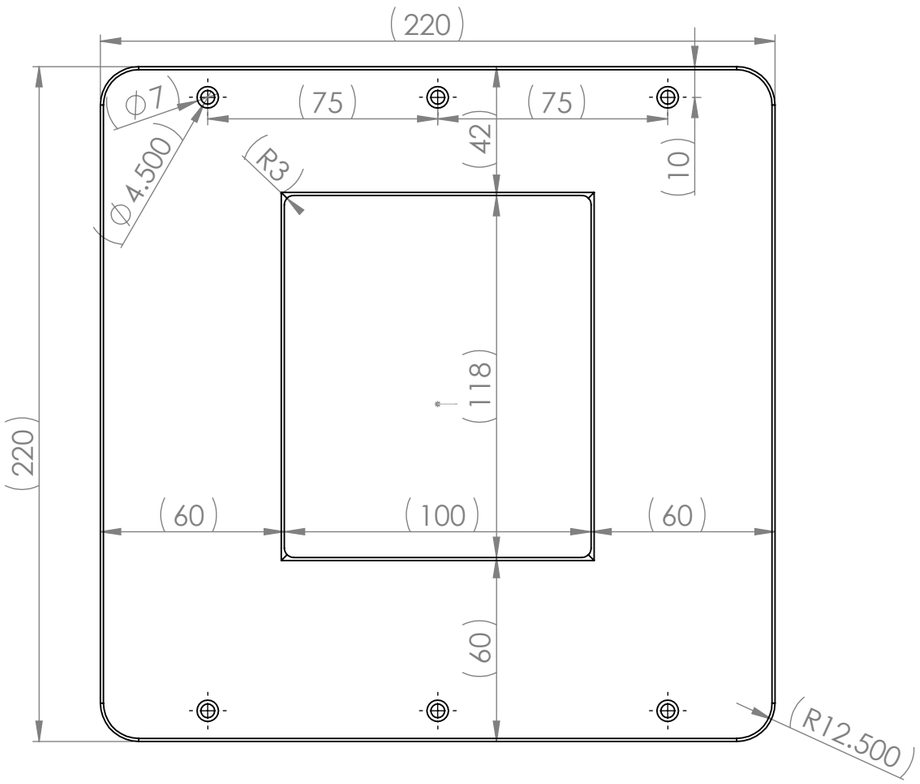

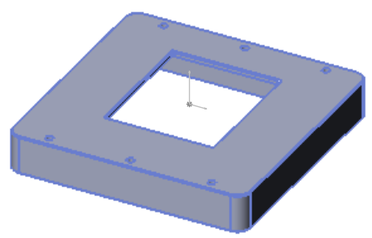

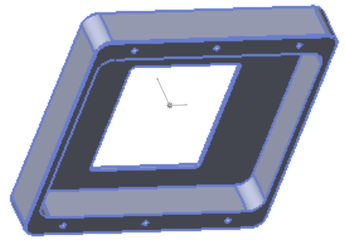

UNLESS OTHERWISE SPECIFIED: DIMENSIONS ARE IN MILLIMETERS SURFACE FINISH: TOLERANCES: LINEAR: ANGULAR:	FINISH: Anodized, black.				DEBUR AND BREAK SHARP EDGES	DO NOT SCALE DRAWING / REVISION 3rd Feb 2016
	NAME	SIGNATURE	DATE			TITLE:
DRAWN						WOSM top
CHK'D						
APPV'D						
MFG						
Q.A				MATERIAL:		DWG NO. top / A3
				WEIGHT:		SCALE:1:2 / SHEET 1 OF 1